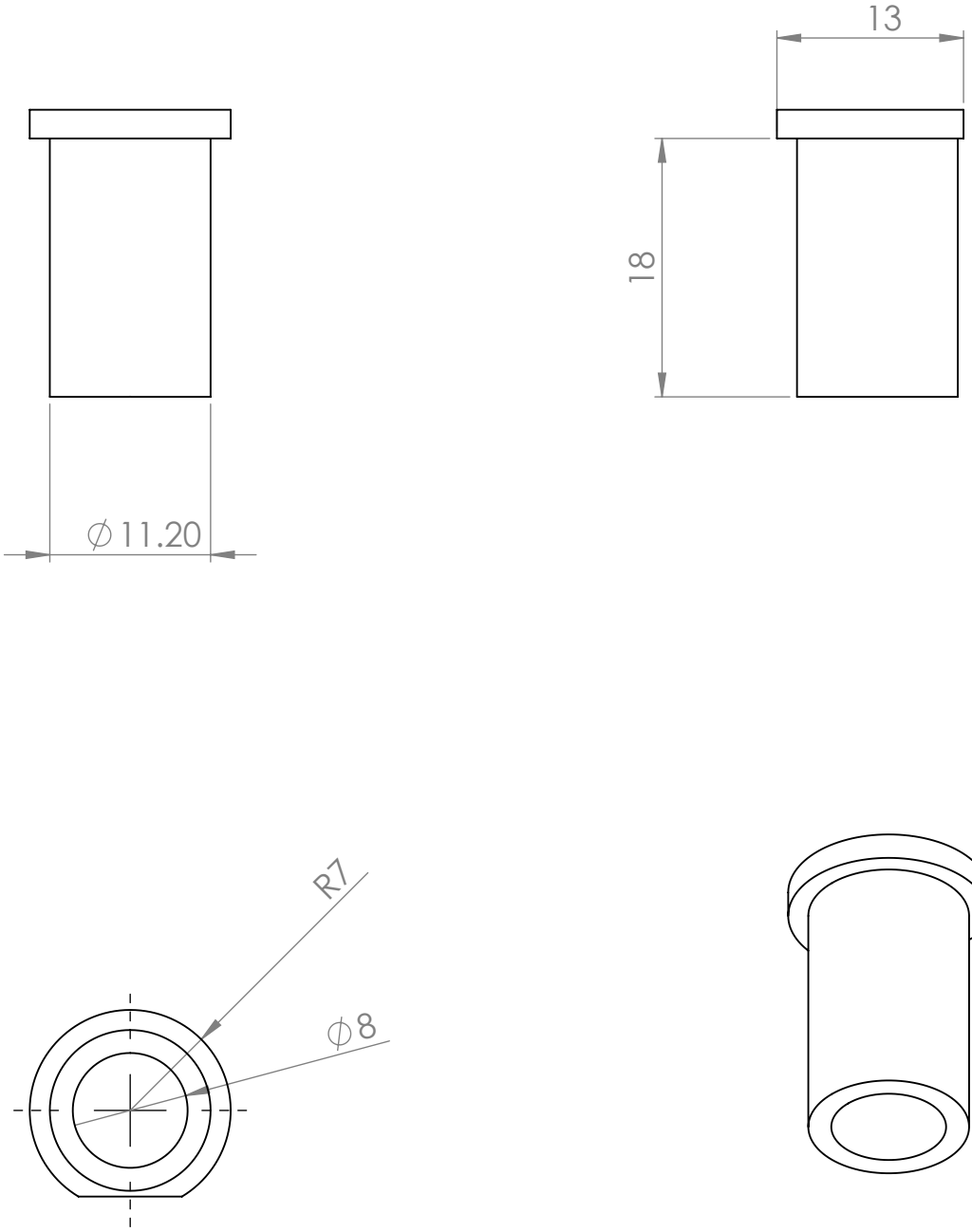

UNLESS OTHERWISE SPECIFIED: DIMENSIONS ARE IN MILLIMETERS SURFACE FINISH: TOLERANCES: LINEAR: ANGULAR:	FINISH:			DEBUR AND BREAK SHARP EDGES	DO NOT SCALE DRAWING	REVISION
	NAME	SIGNATURE	DATE		TITLE:	
DRAWN	M.Ahmadi				بوش لولا 3	
CHK'D						
APPV'D						
MFG						
Q.A				MATERIAL:	DWG NO.	
					www.sabapsi.com	
				WEIGHT:	SCALE:2:1	SHEET 1 OF 1